Front

Back

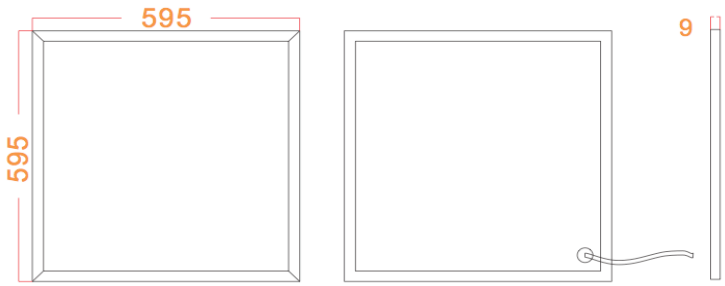

Electrical/Optical Characteristics

NUMBER	ITEM	DESCRIPTION
01	Input Voltage	AC100-240V
02	Operating Voltage	DC36V
03	Power Consumption	45W
04	Power Factor	0.90-0.95
05	LED Type	SMD 2835
06	LED Q'ty	240PCS*0.2W
07	Luminous Flux	4050-4400LM
09	CCT	2800-3200K/4000-4750K/5500-6500K
10	Beam Angle	120°
11	CRI	≧ 80 Ra
12	Life Time	≧ 49999H
13	Certifications	CE,ROHS
14	IP Code	IP41
15	luminaires Class	Class III
16	Fixing Ways	In-built,Mounting,Suspending
17	Operating Temperature	-20℃to+50℃
18	Storage Temperature	-30℃to+60℃
19	Humidity Operating	10-80%RH
20	Humidity Storage	10-90%RH

http://www.36588ledlighting.com

Installation Instruction

1.In-built

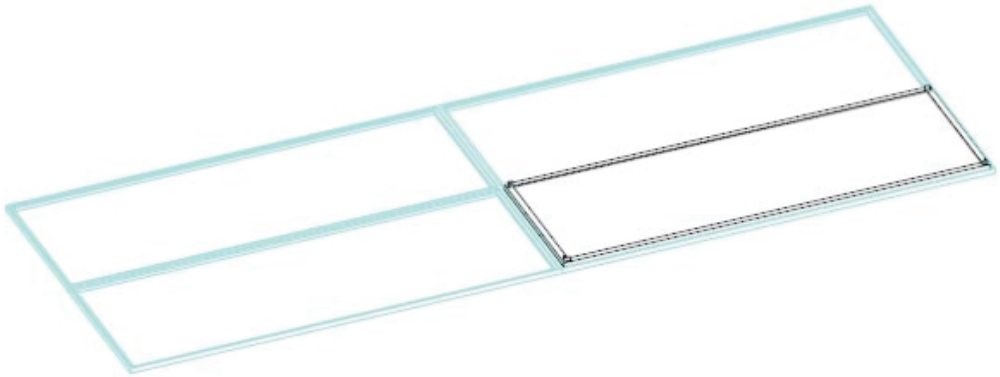

2.Mounting

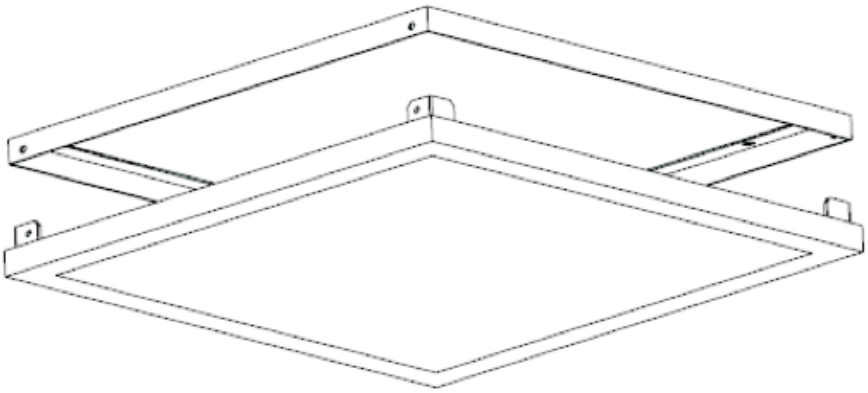

3.Suspending

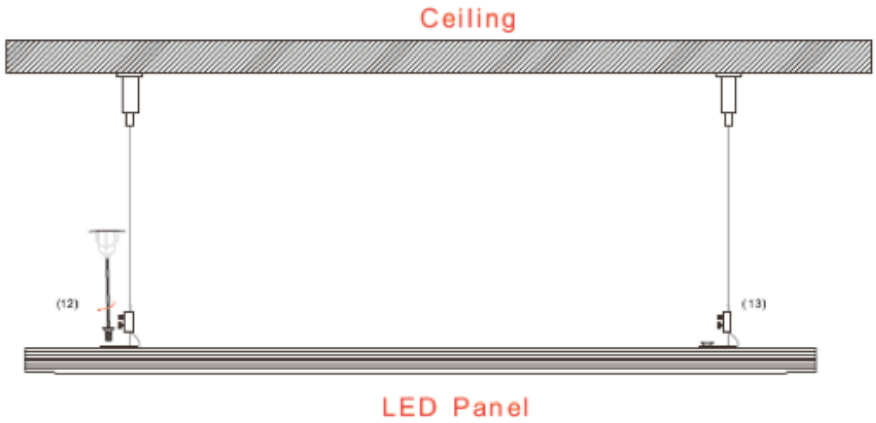

Packing Info

Inner Boxes package:

Quantity: 2 pcs/ box

NW: 7.5kg

GW :8.5kg

Dimension: L695 X W655 X H55 mm

Package material: K 3 K corrugated paper

Outer carton package:

Quantity: 6 * 1 layer = 6 pcs/carton

NW: 22.5kg

GW: 27.5kg

Dimension: L670 X W180 X H710mm

Package material: K = K corrugated paper